STD–G1

PIPE GUIDES WITH OR WITHOUT BASE PLATES

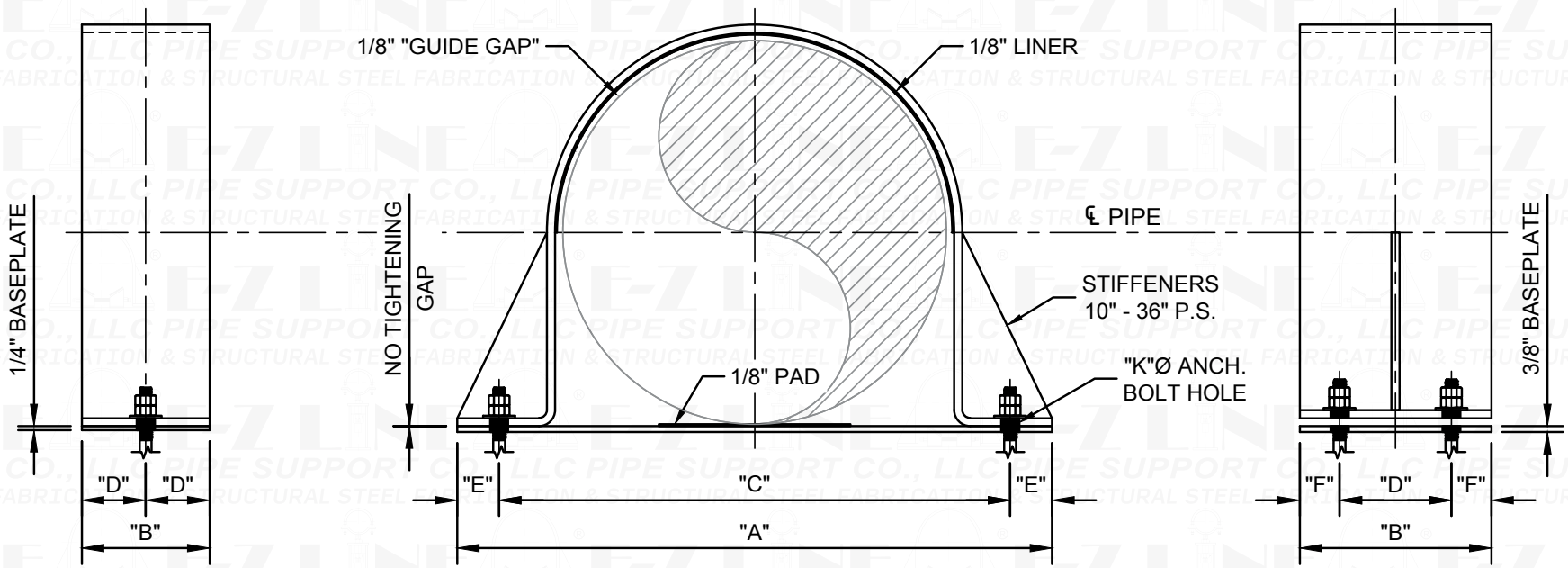

2" - 8" P.S. **SECTION THRU PIPE AT SUPPORT** **10" - 36" P.S.**

E-Z LINE PIPE SUPPORT CO., LLC & STRUCTURAL STEEL FABRICATION

SHEET STD-G1

© E-Z LINE® PIPE SUPPORT CO., LLC. ALL RIGHTS RESERVED