STRUCTURAL STEEL T–SUPPORTS/CABLE TRAY SUPPORTS

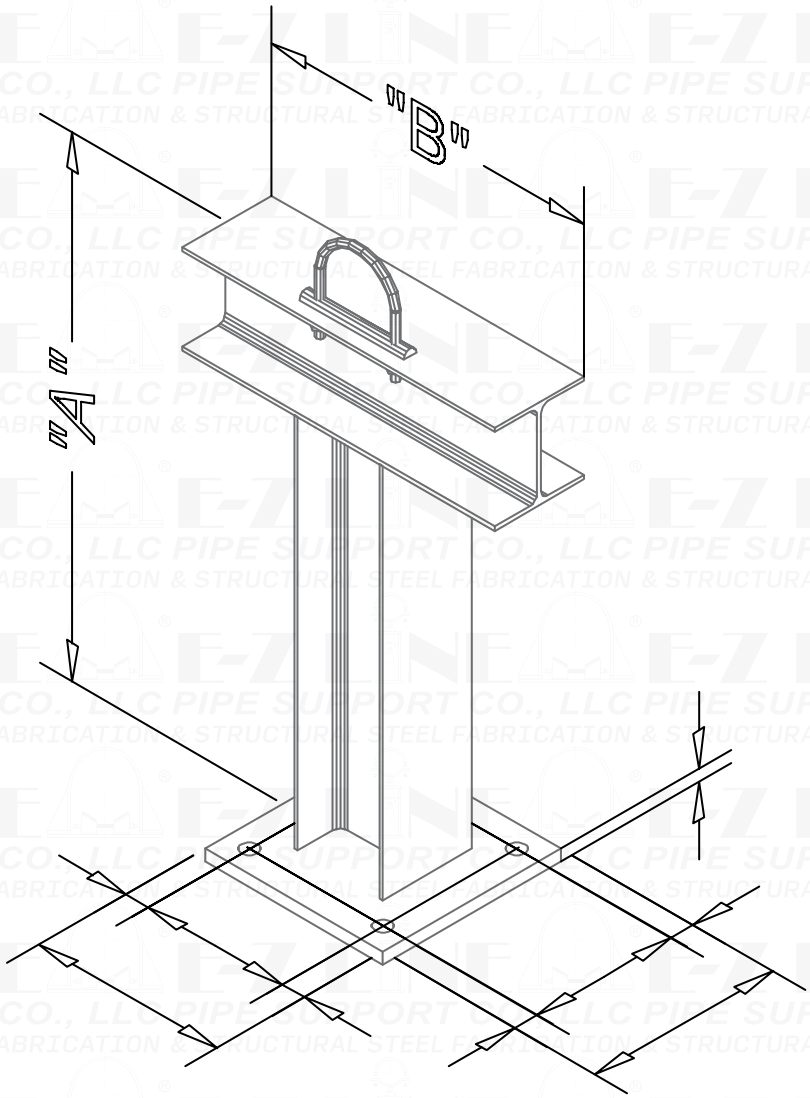

E-Z LINE®
PIPE SUPPORT CO., LLC
& STRUCTURAL STEEL FABRICATION

© E-Z LINE® PIPE SUPPORT CO., LLC. ALL RIGHTS RESERVED