WSBC-01

WIDE FLANGE, SHIM BLOCK AND PIPE CLAMP ASSEMBLY

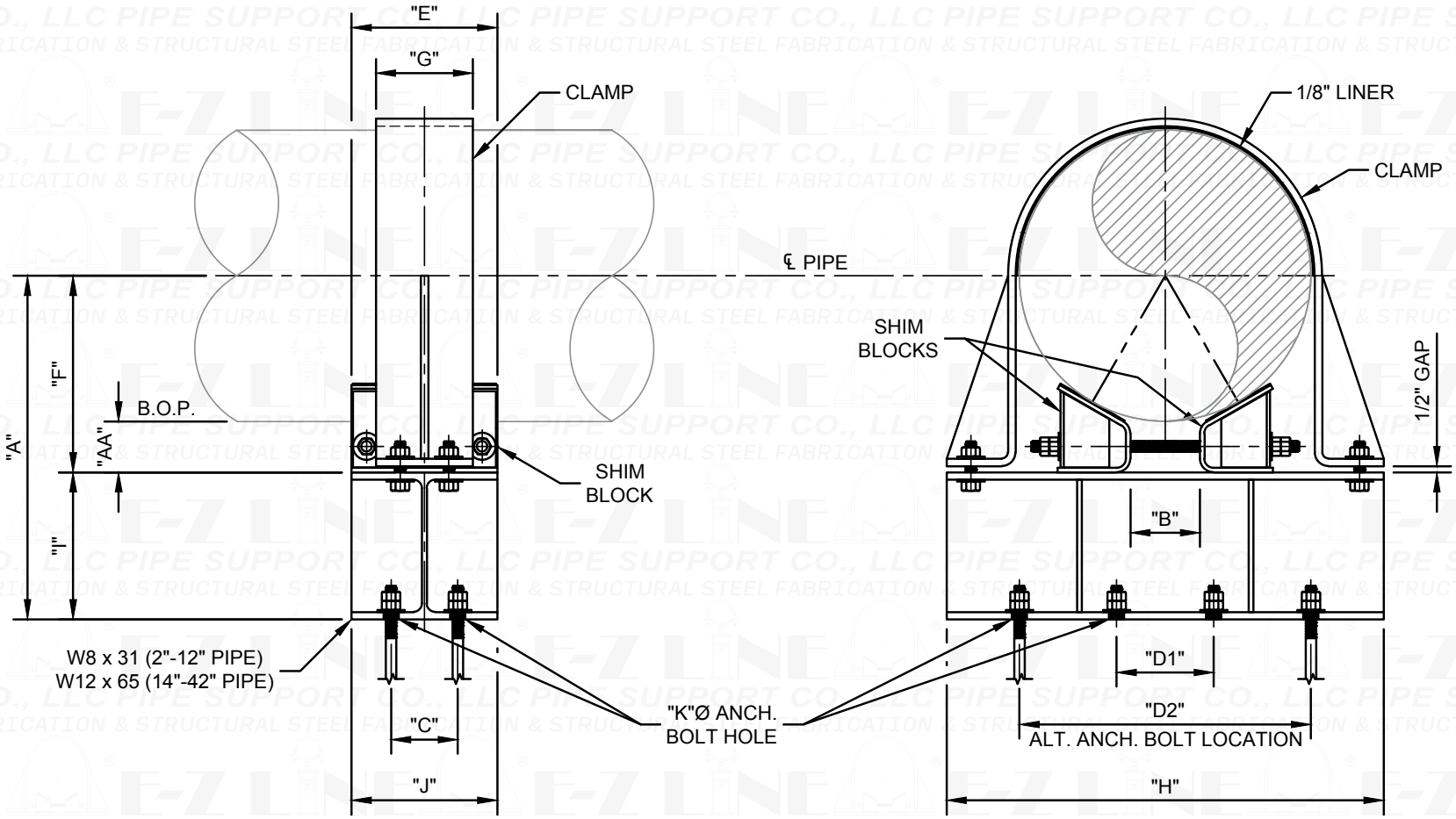

ELEVATION AT PIPE SUPPORT

SECTION THRU PIPE AT SUPPORT

E-Z LINE PIPE SUPPORT CO., LLC & STRUCTURAL STEEL FABRICATION

SHEET WSBC-01

© E-Z LINE® PIPE SUPPORT CO., LLC. ALL RIGHTS RESERVED