HDC-01

HOLD DOWN CLAMP

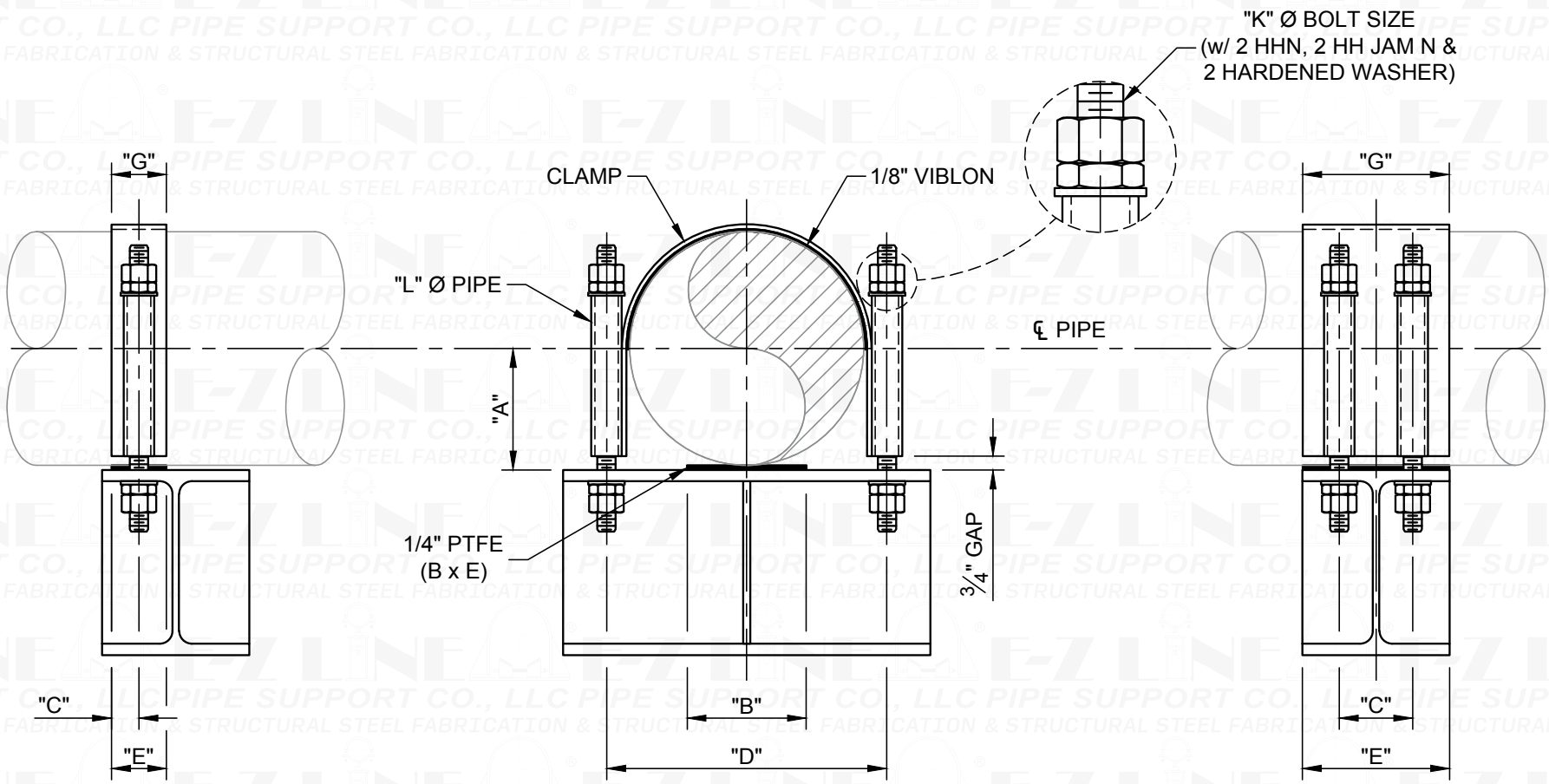

2" - 6" PIPE **SECTION THRU PIPE AT SUPPORT** **8" - 24" PIPE**

E-Z LINE PIPE SUPPORT CO., LLC & STRUCTURAL STEEL FABRICATION

SHEET HDC-01

© E-Z LINE® PIPE SUPPORT CO., LLC. ALL RIGHTS RESERVED